2024 5th International Conference for Emerging Technology (INCET)
Karnataka, India. May 24-26, 2024

Food Spoilge Detection using IoT and Machine Learning

[1]Keerthana Mogilipalem, [2]Ajay Kumar Poodari, [3]Yashwanth Pulipati, [4]Kiran Babu Sangeetha
[1,2,3]Students, Department of Electronics and Communication Engineering,
Vignana Bharathi Institute of Technology, Ghatkesar, Hyderabad, Telangana, India.
[4]Associate Professor, Department of Electronics and Communication Engineering,Vignana Bharathi Institute of Technology, Ghatkesar, Hyderabad, Telangana, India.
mogilipalemkeerthana@gmail.com

***Abstract*- Food spoilage is a critical concern in the industry, leading to economic losses and food safety issues. We propose a comprehensive system that leveraging the synergy of Internet of Things (IoT) and Machine learning. By deploying IoT sensors across the food supply chain to collect environmental data, such as temperature and humidity, and then processing this data with machine learning algorithms, we can promptly identify spoilage patterns and anomalies. This approach enables early spoilage detection, reducing food waste, enhancing food safety, and optimizing supply chain management. Ultimately, it offers a comprehensive and cost-effective solution to the food industry's spoilage-related challenges, benefitting both businesses and consumers.**

Keywords: Internet of Things, Machine Learning, Anomalies.

I. INTRODUCTION

Food spoilage is a pervasive global issue with far-reaching consequences for both consumers and the food industry. The economic losses, food safety risks, and environmental impact associates with spoiled food underscore the urgency of developing effective monitoring and detection systems. In response, this paper introduces a cutting-edge solution that harnesses the synergy using Internet of Things (IoT) and machine learning technology to address the problem of food spoiling. We can continuously collect vital information on environmental elements like temperature, humidity, and gas levels by placing IoT sensors across the food supply chain. [1]. This real-time data is then processed by advanced machine learning algorithms to foresee and identify spoiling patterns, allowing for prompt action. In addition to providing a useful and affordable method for reducing food waste and improving food safety, our study also addresses the changing needs of a sustainable and technologically advanced food business [2]. This paper delves into the intricacies of our approach, presenting methodologies, results, and implications for the future of food spoilage detection.

II. LITERATURE SURVEY

In order to complete this activity quickly and accurately, we looked over and tried to grasp some reference material before we started. The study we studied before beginning this research project is known as the literature review. It is clear from reading these publications that academics have put forth a number of reliable ideas for food spoilage detection using IoT and machine learning.

Naveed Shahzad et.al,[1] explains about the electrical and biosensors. High-tech instrument to determine the freshness of fruits, meat, and vegetables. A hydrogen ion concentration device, a moisture sensor, and a gas sensor must be identified and chosen in order to create a smart food that can tell users whether it should be eaten or thrown away. To enable customers to select the food category that will be tested, an Android app is being developed.

Suruchi Parmar et.al,[2] describes the study's of author. Their study, titled "An Effective System for Assessing Freshness and Quality of Food," centered on two critical factors. Their inquiry began with a look at the ethanol levels in banana samples to see whether theycould forecast ripeness and deterioration. Notably, when bananas matured, the ethanol concentration rose, allowing them to identify the degradation process using a MQ3 sensor.

In addition, the researchers investigated a real-time milk monitoring device. They used pH to detect the freshnessor edibility of milk samples. They were able to quickly spot any changes suggesting rotting by regularly monitoring the pH levels.

Rajesh Megalinagam et.al,[3] introduced an innovative method for identifying food degradation by combining artificial intelligence and machine learning with the capability of picture classification. Their approach harnesses various AI technologies, including computer vision, deep Convolution Neural Networks (CNN), and machine learning methods such as the K-means clustering algorithm for image color classification and HSV values for detecting food spoilage [3]. To accomplish this, Iwendi and collaborators employed an Artificial Intelligence strategy that utilized a network classifier to identify and assess security levels in IoT. This project was carried out on the Jupyter notebook platform. The analysis results clearly demonstrate that the proposed application exhibits an outstanding level of accuracy.

Benjamin et.al,[4] suggested a revolutionary method for monitoring food quality by usinga foldable UHF RFID sensor. The inter-digital capacity of an RFID antenna is the basis for this sensor covered witha biopolymer derived from plants. The interplay of the electromagnetic characteristics of the capacity and the biopolymer is critical in modifying the coefficient of adaptation between the antenna and chip of an RFID tag [6]. This coefficient is affected by variations in food deterioration. They conducted studies with the RFID sensor, capturingmeasurements in a controlled setting that simulated food degradation.

Nivedita Sana et.al,[5] presents Date fruits are classified into two types: which are appropriate for consuming and which arenot. This study's technique may be divided into three stages: image processing, feature extraction, and classification. Various characteristics of the fruits, such as color, texture, and form, were carefully analyzed and combined. The Scale Invariant Feature Transform (SIFT) was used for feature extraction, and an SVM (Support Vector

2024 5th International Conference for Emerging Technology (INCET) | 979-8-3503-6115-5/24/$31.00 ©2024 IEEE | DOI: 10.1109/INCET61516.2024.10593159

Authorized licensed use limited to: Indian Institute of Information technology Sricity. Downloaded on August 17,2025 at 04:26:49 UTC from IEEE Xplore. Restrictions apply.

Machine) classifier with a linear kernel function was used for classification. The results acquired from thistechnique indicate the SVM classifier's remarkable performance, suggesting its perfect operation in this situation.

III. PROBLEM IDENTIFICATION

Food spoilage is a major problem that affects both consumers and businesses. An estimated an annual loss or waste of one-third of the food produced for human consumption occurs. [2]. This waste causes both economical and impact.

Traditional methods of food spoilage detection rely on human senses, such as sight, smell, and touch. However, these methods can be unreliable and subjective. Additionally, they are not practical for large-scale food production and distribution operations.

IoT-based food spoilage detection systems use sensors to collect data on various factors, such as temperature, humidity, and gas composition. This data is then transmitted to a cloud platform for analysis using artificial intelligence algorithms. The artificial intelligence algorithms can identify patterns in the data that are associated with food spoilage. This information can then be used to generate alerts or take other actions to prevent food waste.

IV. PROPOSED METHOD

The fundamental purpose of this research is to create a device that measures food freshness and deterioration. A variety of sensors, including those for temperature, humidity, and methane gas, are used to analyze variousaspects of food quality. The gadget includes necessary components like as a Wi-Fi module (esp8266) and sensors such as the MQ4 sensor, DHT sensor, and buzzer. The Wi-Fi module allows real-time data from thesesensors to be sent to a laptop [6]. A pre-trained model is applied to the incoming real-time data using a Machine Learning technique to identify whether the ingested food has degraded or remains fresh.

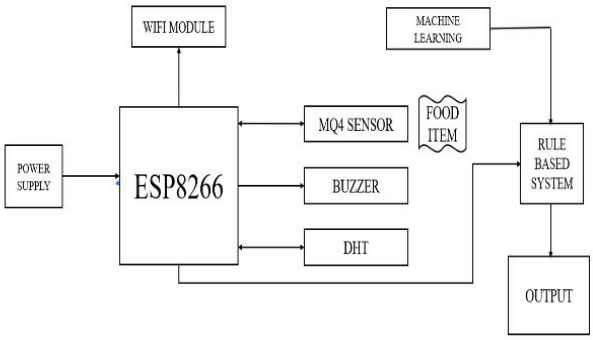

Fig. 1. Block Diagram

Food spoilage detection using IoT technology employs sensors to monitor and transmit data on factors like temperature, humidity, and gas levels in Fig 1. Analyzing this data with machine learning enables the early detection of spoilage. When spoilage is detected, immediate alerts are issued, reducing food waste and enhancing food safety across the supply chain.

A. Wi-Fi Module

With an inbuilt TCP/IP protocol, the ESP8266 Wi-Fi Module is a self-contained SOC. We will be adding the IP address and port of device for the device connection [6].

B. MQ4 Sensor

The MQ4 gas sensor is a semiconductor device designed to identify methane gas (natural gas, CNG, LNG) at concentrationsfrom 300 ppm to 10,000 ppm, making it ideal for leak detection.

C. DHT Sensor

The DHT sensor is a low-cost internet-based sensor for both temperature and humidity. A thermistor and capacitive humidity sensor are used to measure the air quality, and a digital signal is output on the data pin. [2].

D. Buzzer

A buzzer, sometimes referred to as a beeper, is a piezoelectric, electromechanical, or mechanical audio signaling device. [7]. These devices are often used for a variety of reasons, including as sounding alarms, establishing timers, generating notifications, and validating user inputs like a mouse click or keyboard. Buzzers and beepers are audio indicators that are used to provide information or cautions to consumers in a range of applications.

SOFTWARE

1) Arduino IDE

For writing and uploading code to Wi-Fi module board, open source software known as the Arduino IDE is employed. Open-source software such as Linux, Mac OS X, and Windows can all be used with the IDE application. It can run C++ and C. An Integrated Development Environment is what is meant to be understood here [6]. Developing on the Arduino "Sketching" and "coding" are common terms used to describe IDEs. For the sketch created in the Arduino IDE software to be uploaded, the Esp8266 board needs to be connected to the IDE. ".ino" is the file extension for the sketch.

2) MATLAB

MATLAB is a powerful programming language used in scientific computing. It is a hybrid of computation and visuals. Programming in a straightforward setting where issues are presented and solutions are given in mathematical form.

Proposed System flow:

In this project, the first approach utilizes an MQ-4 gas sensor to detect methane gas levels within food containers.The sensor is carefully calibrated to accurately determine methane concentrations corresponding to food spoilage. Data is collected over a time to establish a spoilage range specific to different types of food items. The gas sensor provides a real-time indicator of the spoilage process, offering a non- invasive and practical means of monitoring food freshness.

The second approach involves training a Convolution Neural Network (CNN) on a diverse dataset containing images of both spoiled and non-spoiled food items. The CNN learns to extract meaningful features from the images and accurately classify them as either spoiled or non-spoiled. By leveraging image analysis in machine learning, the system can identify subtle visual cues associated with food deterioration, enhancing the overall accuracy of the detection process.

Authorized licensed use limited to: Indian Institute of Information technology Sricity. Downloaded on August 17,2025 at 04:26:49 UTC from IEEE Xplore. Restrictions apply.

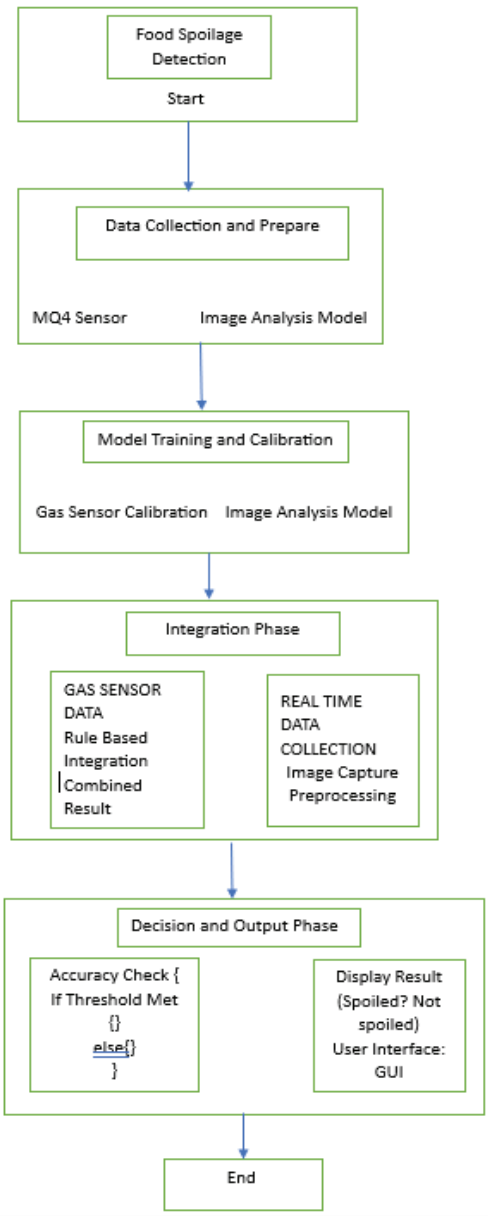

Fig. 2. Flow Chart

In Fig 2, To create a comprehensive and reliable detection system, we integrate the outputs from both the gas sensor and image analysis approaches using a rule-based system. The combined approach enables us to achieve higher accuracy in determining food spoilage. We set an accuracy threshold that the system must meet to make a final decision on the freshness of the food item.

V. RESULTS AND DISCUSSION

Food spoilage detection using IoT technology employs sensors to monitor factors like temperature and humidity, transmitting data to a central platform. Machine learning models analyze this data, swiftly identifying spoilage indicators. Alerts are then sent to users, preventing unsafe food consumption and reducing food wastage, ultimately enhancing food safety and economic efficiency.

A food spoilage detection system, employing machine learning technology, utilizes sensor data for continuous monitoring of food conditions. It analyzes various parameters like temperature and humidity.

Machine learning algorithms are deployed to detect spoilage patterns and promptly notify users when problems are detected, contributing to food safety enhancement and waste reduction. This system plays a pivotal role in maintaining the quality of stored food products while improving overall efficiency in food management.

The integrated approach's effective execution has important implications for food safety and waste savings. We gain 100% accuracy after using the IoT and CNN algorithms to our Machine Learning Model.

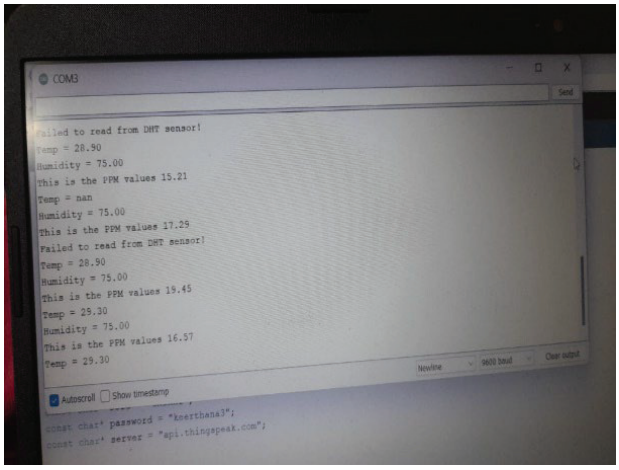

Fig. 3. Arduino IDE Accuracy

In Fig 3, The precision of the banana's ppm readings, temperature, and humidity when it is placed close to the MQ4 sensor may be measured using the Arduino IDE programmed.

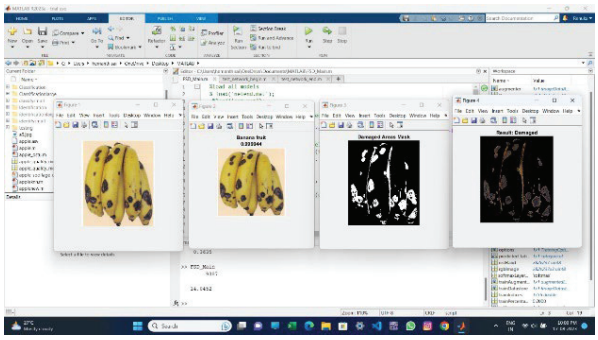

Fig. 4. Detection of affected areas in Banana

In Fig 4, In order to take a picture of the banana using a camera, we first use MATLAB. Once uploaded, information is stored on the cloud. Step two involves detecting the damaged area mask with the aid of binary integers 0 and 1. Depending on the precision, the outcome suffers.

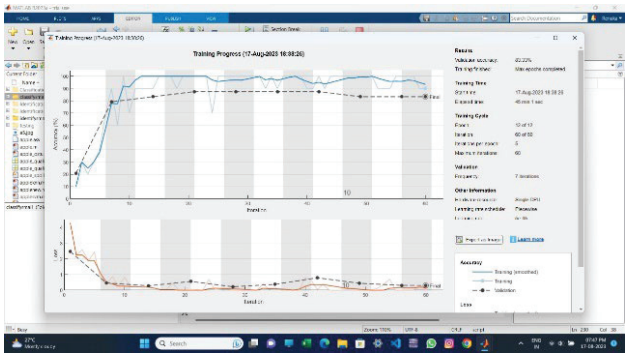

Fig. 5. Banana detection Accuracy graph

Authorized licensed use limited to: Indian Institute of Information technology Sricity. Downloaded on August 17,2025 at 04:26:49 UTC from IEEE Xplore. Restrictions apply.

In Fig 5, The end outcome is displayed as a graph with a value of 100% for accuracy, combining the accuracy of both IoT and Machine Learning through the use of a Rule-Based approach.

VI. CONCLUSION & FUTURE SCOPE

The proposed system represents a successful fusion of advanced technology and innovative methodologies. By harnessing the power of gas sensor data and image analysis in machine learning, we contribute to ensuring food quality and security in our interconnected world. We envision broader applications of our system, with the potential to foster healthier living and promote sustainability in the global food ecosystem.

Our future implementation is to add more food items like meat varieties. This system can be employed in food packaging industries to check the quality of food items with high speed and accuracy. This method of detection can also be useful in food-based product-type industries to check the manufacturing defects by changing the trained model. Based on the future requirement it can be easily updated and changes are made as per business requirement.

REFERENCES

[1] "Artificial Intelligence: A Real Opportunity in the Food Industry", Springer Science and Business Media LLC, (2023). Pp.7.

[2] Nabilah Tabassum Oshin, Fardin Ahsan Shafi, Mahfuzur Rahman, Halima Khatun, Mohammad Rejwan Uddin, Mahady Hasan. "Food Rotting Prediction and Detection System for Warehouse", 2023 IEEE Region 10Symposium (TENSYMP), (2023). Pp. 1-5.

[3] Harshee Pitroda, Abhay Kolhe. "Freshy Pal: A Proposal of an Interactive Web based Tool to Automatically detect Microbial Growth on White bread", 2023 IEEE 8th International Conference for Convergence in Technology (I2CT), 1-8, Apr, 2023.

[4] Nivedita Sana, Dali Naidu Arnepalli, Chandraraj Krishnan. "Chapter 42 A Low-cost Setup to Evaluate the Performance of a Methanotrophic Activity in Bio-augmented Systems at a Laboratory Scale", Springer Science and Business Media LLC,(2023).Pp.13

[5] Nikhil Kumar, Sayanti Maity, Rittika Karmakar, Paridhi Verma, Swati Swayamsiddha. "Indoor Plant Health Monitoring and Tracking System", 2022 OPJU International Technology Conference on Emerging Thechnologies for Sustainable Development (OTCON), Raigarh, Chattigarh, India, 2023, Pp. 1-5.

[6] Kumar A. Arduino sensor-based approach for detecting the food spoilage. Int J Eng Appl Sci Technol. (2020) 5:596–9.

[7] Megalingam RK, Sree GS, Reddy GM, Krishna IRS, Suriya L. food spoilage detection using convolutional neural networks and k means clustering. In: 2019 3rd International Conference on Recent Developments in Control, Automation &Power Engineering (RDCAPE). Noida: IEEE (2019).Pp. 488–93.

[8] Saggin B, Belaizi Y, Vena A, Sorli B, Guillard V, Dedieu I. A Flexible Biopolymer based UHF RFID-Sensor for food quality monitoring. In: 2019 IEEE International Conference on RFID Technology and Applications (RFID-TA). Pisa: IEEE (2019). Pp. 484–7.

[9] Fatima Mustafa and Silvana Andreesuc, "Chemical and Biological Sensors for Food quality Monitoring and Smart", Phil. Trans. Roy. Soc. London, Vol. A247, Pp. 529-551, October 2018.

[10] Benabdellah N, Bourhaleb M, Benazzi N, Dahbi S. Design of temperature and humidity sensors for an electronic nose used in rotten food. In:2016International Conference on Electrical and Information Technologies (ICEIT). Tangiers: IEEE (2016). Pp. 505–9.

[11] Geol p, Geol S, Bhatia S. Food quality assessment using fuzzy logic. In: 2015 2nd International Conference on Computing for Sustainable Global Development (INDIACom). New Delhi: IEEE: (2015). Pp. 1459-62.

Authorized licensed use limited to: Indian Institute of Information technology Sricity. Downloaded on August 17,2025 at 04:26:49 UTC from IEEE Xplore. Restrictions apply.